Technical Datasheet

MULTIGUARD

SD1

DC-Ups series

Charging unit 25W

Output voltage 12V (13,6V) – 24V (27,2V)

Intelligent battery protection

Technical Data	S1-1225	S1-2425
Input voltage	85 – 264 VAC, 47-63Hz	
Output voltage	13,6VDC	27,2VDC
Output current	1,5A	0,75A
Max. Contiual Load	56% of output current with batteries in circuit	
Efficiency	85%	
Peak inrush current	< 2A within 10ms	
Operating temperature	-10°C to +35°C	
Storage temperature	-40°C to +85°C	
Load regulation	0.5% for 0 to 100% load change	
Line regulation	0.2% for specified input voltage variation at 50% output power	
Switch frequency	50 kHz	
Output ripple	1% of Vout	
Output current limit	105% to 150% of max value.	
Output voltage limit	16V + - 6%	33V + - 6%
MTBF	Min. 250.000h at 25°C.	
Safety standard	EN 60950, UL 60950-1, IEC/EN 60950-1 2nd edition	
Safety class	I (With earth protection)	
Emission standards	EN50081-1	
Immunity standards	EN50082-1	
Harmonic emission	EN61000-3-2 , class A	
Power Factor Correction	**Yes**	
Battery surveillance	Automatic battery test every 24 hour (replacement notice after 3 years)	
Dimensions Weight	211X200X77mm 1,4KG (without battery)	
Mounting method	Wall Mount Cabinet	
IP class	IP20	
Terminals	Terminal Blocks	
Battery connection	2X0,75 sqmm RD/BK WIRE	
Max. Battery Capacity	2x 2,2Ah @ 27,2V 1x7,2Ah @ 13,6V	

Technical Datasheet

MULTIGUARD

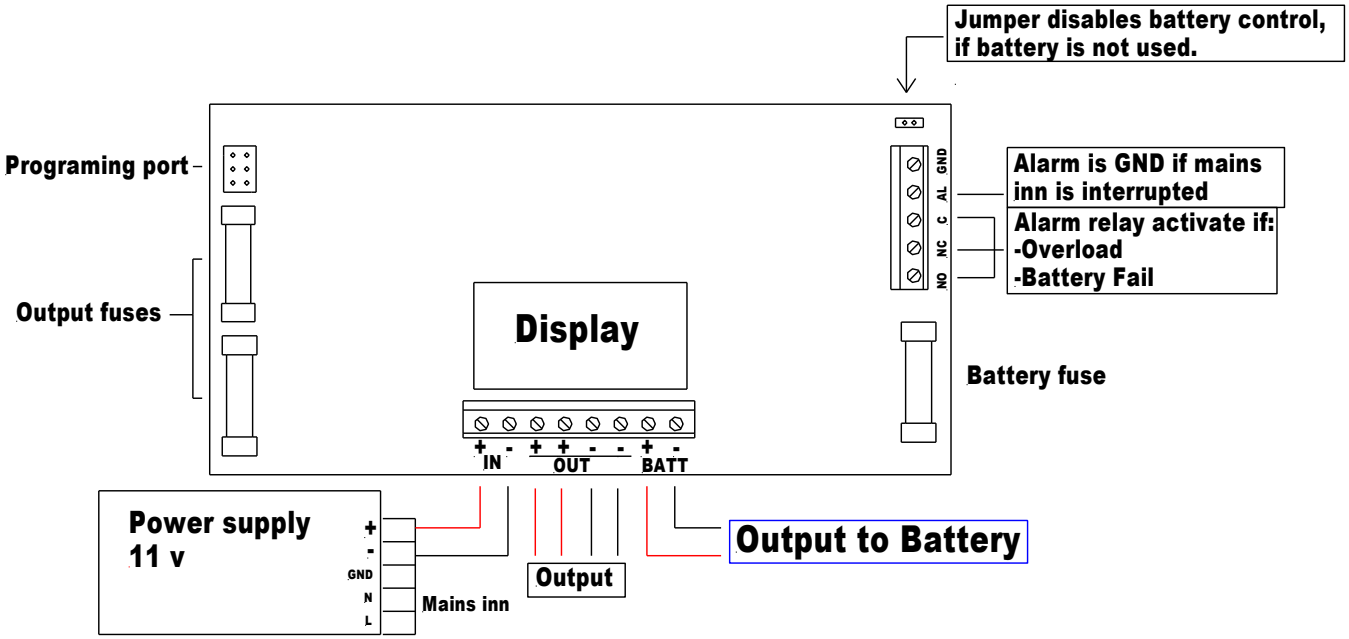

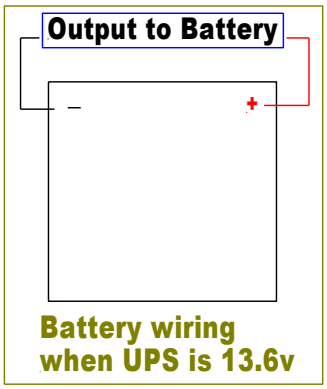

Battery wiring when UPS is 13.6v

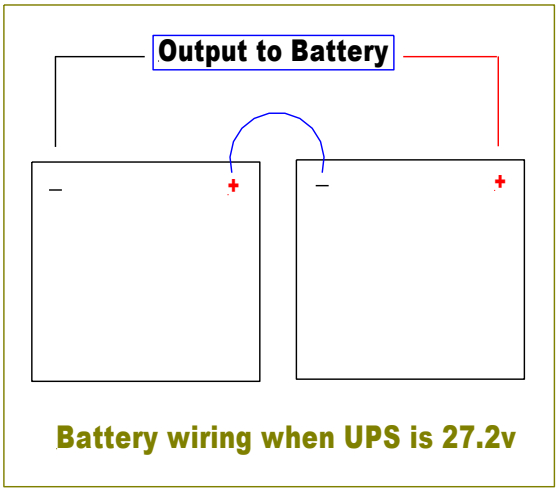

Battery wiring when UPS is 27.2v